TERMINALE A SNODO RILUBRIFICABILE
BALL-JOINT END WITH GREASE NIPPLE

CSTS...C

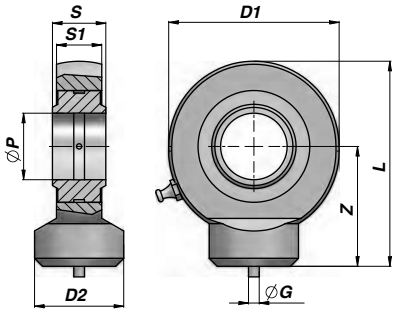

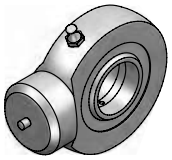

Codice *Code*	ØP	Z	S	D1	S1	L	ØD2	ØG	FC (kN)	kg
*CSTS010C00	10	24	9	29	7	38.5	15.0	3	8.15	0,04
*CSTS012C00	12	27	10	34	8	44.0	17.5	3	10.80	0,06
**CSTS015C00	15	31	12	40	10	51.0	21.0	4	17.00	0,12
CSTS016C00 (A)	16	35	14	46	11	58.0	24.0	4	19.00	0,17
**CSTS017C00	17	35	14	46	11	58.0	24.0	4	21.20	0,18
CSTS020C00	20	38	16	53	13	64.5	27.5	4	30.00	0,26
CSTS025C00	25	45	20	64	17	77.0	33.5	4	48.00	0,45
CSTS030C00	30	51	22	73	19	87.5	40.0	4	62.00	0,67
CSTS035C00	35	61	25	82	21	102.0	47.0	4	80.00	1,02
CSTS040C00	40	69	28	92	23	115.0	52.0	4	100.00	1,40
CSTS045C00	45	77	32	102	27	128.0	58.0	6	127.00	1,93
CSTS050C00	50	88	35	112	30	144.0	62.0	6	156.00	2,69
CSTS060C00	60	100	44	135	38	167.5	70.0	6	245.00	4,60
CSTS070C00	70	115	49	160	42	195.0	80.0	6	315.00	7,00
CSTS080C00	80	141	55	180	47	231.0	95.0	6	400.00	11,00

FC = CARICO DINAMICO AMMESSO - *MAX DYNAMIC LOAD*
(A) = FUORI NORMATIVA - *OUT OF RULE*

* = NON RILUBRIFICABILE - *WITHOUT GREASE NIPPLE*
** = RILUBRIFICABILE MEDIANTE FORO - *LUBRICATING HOLE IN THE HEAD*

MATERIALE : ACCIAIO ISO 12240-1 SERIE E - TIPO S
MATERIAL : STEEL ISO 12240-1 SERIES E - TYPE S

TERMINALE A SNODO RILUBRIFICABILE
BALL-JOINT END WITH GREASE NIPPLE

CSTS...N

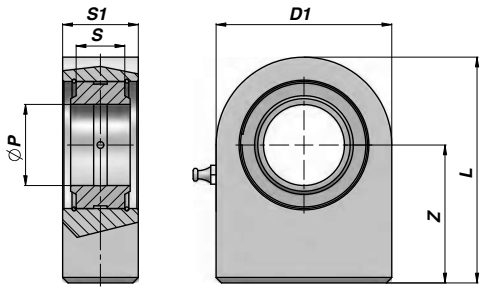

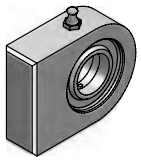

Codice *Code*	ØP	Z	S	D1	S1	L	FC (kN)	kg
*CSTS015N00	15	31	12	45	16.0	53.5	17.0	0,22
CSTS016N00 (A)	16	35	14	48	17.5	59.0	21.2	0,29
CSTS017N00	17	35	14	48	17.5	59.0	21.2	0,29
CSTS020N00	20	38	16	50	19.0	63.0	30.0	0,36
CSTS025N00	25	45	20	55	23.0	72.5	48.0	0,53
CSTS030N00	30	51	22	65	28.0	83.5	62.0	0,85
CSTS035N00	35	61	25	83	30.0	102.5	80.0	1,50
CSTS040N00	40	69	28	100	35.0	119.0	100.0	2,42
CSTS045N00	45	77	32	110	40.0	132.0	127.0	3,39
CSTS050N00	50	88	35	123	40.0	149.5	156.0	4,24
CSTS060N00	60	100	44	140	50.0	170.0	245.0	7,10
CSTS070N00	70	115	49	164	55.0	197.0	315.0	10,70
CSTS080N00	80	141	55	180	60.0	231.0	400.0	15,10
CSTS090N00 (1)	90	150	60	226	65.0	263.0	490.0	23,40
CSTS100N00 (1)	100	170	70	250	70.0	295.0	610.0	33,10
CSTS110N00 (1)	110	185	70	295	80.0	332.5	655.0	48,50
CSTS120N00 (1)	120	210	85	360	90.0	390.0	950.0	79,50

FC = CARICO DINAMICO AMMESSO - *MAX DYNAMIC LOAD*
(A) = FUORI NORMATIVA - *OUT OF RULE*

* = NON RILUBRIFICABILE - *WITHOUT GREASE NIPPLE*
(1) = PANTOGRAFATI - *PROFILE PLATE*

MATERIALE : ACCIAIO ISO 12240-1 SERIE E
MATERIAL : STEEL ISO 12240-1 SERIES E

L'azienda si riserva il diritto di apportare modifiche al prodotto senza preavviso alla clientela.
The company reserves the right to modify the product at any time without prior notice.